Round 3 - Saturday, January 23rd, 2021

SHOTLINK

The American Express

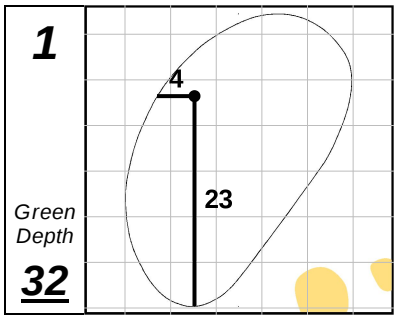

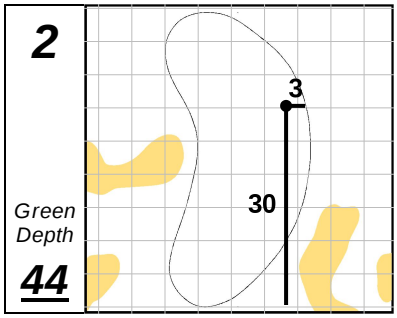

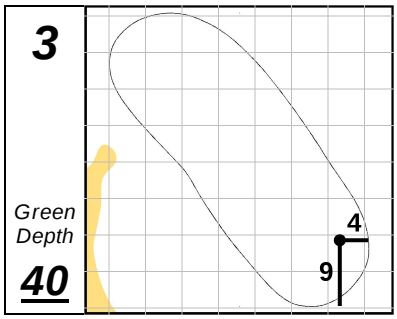

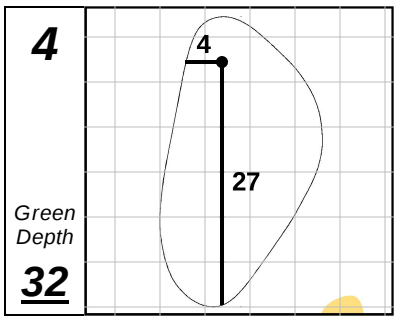

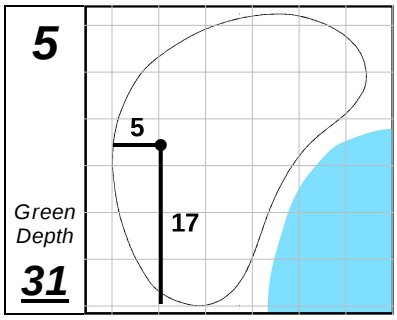

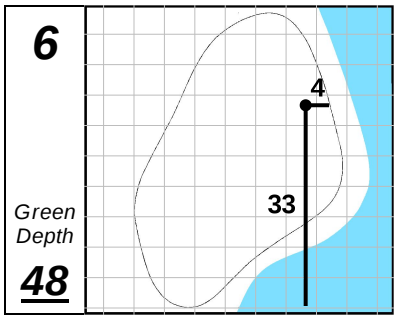

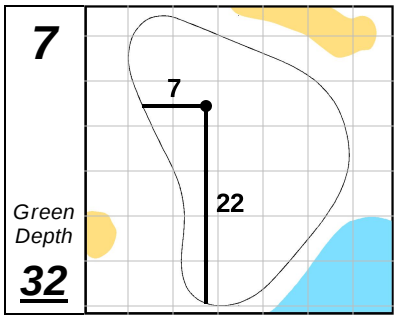

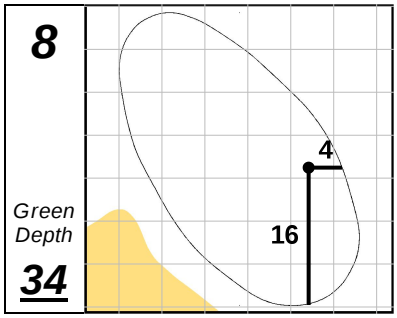

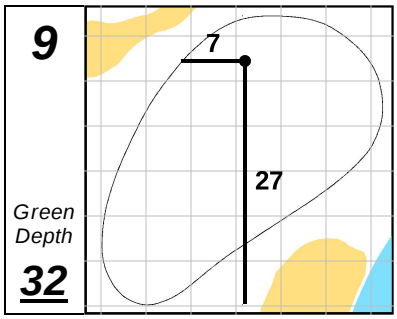

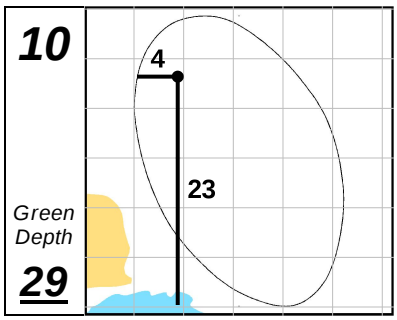

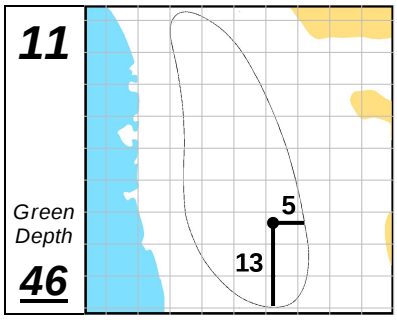

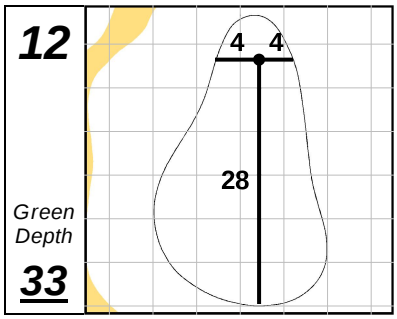

Stadium Course

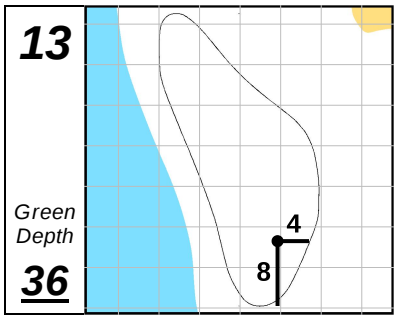

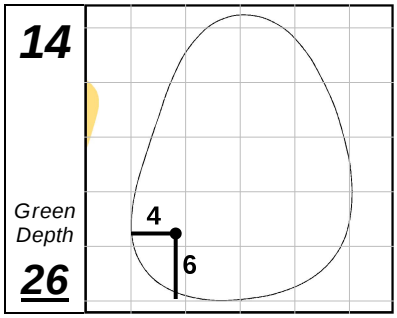

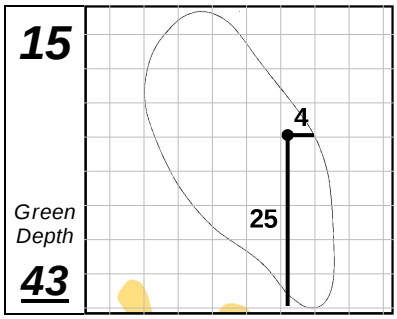

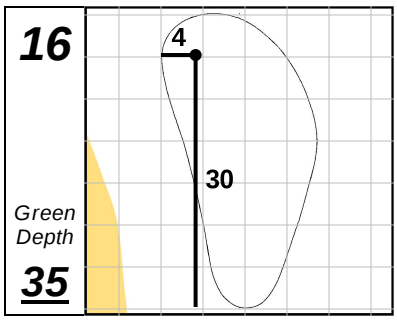

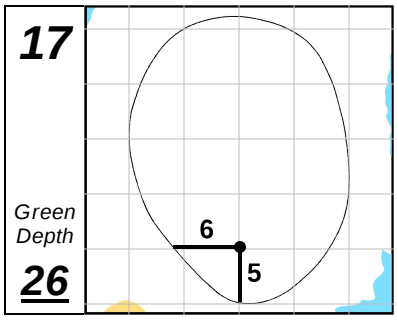

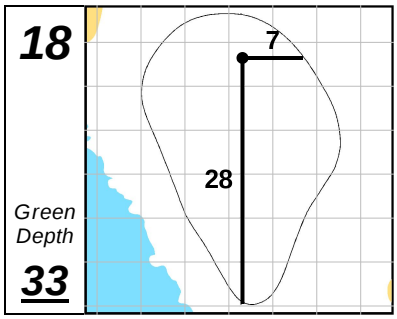

Each side of a complete square on the green represents 5 YARDS.

Friday, January 22, 2021 4:07 PM